Transmission Line Fault Detection System

Madhav B. Katade*[1], Amol S. Jadhav*[2], Pratik A. Wakchaure*[3], Karan S. Gaikwad*[4], S. J. Wagchaure*[5]

[1*](Department of Electrical Engineering, M. S. B. T. E., Sanjivani K .B. P. Polytechnic, Kopargaoan, Maharashtra, India Email: madhavkatade5@gmail.com)

[*2](Department of Electrical Engineering, M. S. B. T. E., Sanjivani K .B. P. Polytechnic, Kopargaoan, Maharashtra, India Email: aj1310536@gmail.com)

[*3](Department of Electrical Engineering, M. S. B. T. E., Sanjivani K .B. P. Polytechnic, Kopargaoan, Maharashtra, India Email: pratikwakchoure3991@gmail.com)

[*4](Department of Electrical Engineering, M. S. B. T. E., Sanjivani K .B. P. Polytechnic, Kopargaoan, Maharashtra, India Email: gaikwadkaran5225@gmail.com)

[*5](Department of Electrical Engineering, M. S. B. T. E., Sanjivani K .B. P. Polytechnic, Kopargaoan, Maharashtra, India Email: sjwagchoureee@sanjivani.org.in)

----------**********----------

Abstract:

The Transmission Line Fault Detection System is developed to identify and indicate faults occurring in electrical transmission lines to ensure reliable and uninterrupted power supply. Transmission lines are prone to faults such as short circuits, line breaks, overcurrent, and overheating due to environmental conditions or system overload. Early detection of such faults is essential to prevent equipment damage and reduce power losses.

This project continuously monitors the transmission line using temperature sensors and relay modules. When abnormal conditions such as excessive temperature or fault current are detected, the system activates a relay mechanism and provides a visual indication at the substation. The system operates using a 5V DC power supply and is designed for educational and demonstration purposes. It is cost-effective, easy to implement, and enhances system safety and reliability.

The proposed system helps in quick fault identification and isolation, minimizing downtime and improving the overall efficiency of power transmission networks.

Keywords— ***Transmission Line, Fault Detection, Overheating Protection, Relay Module, Temperature Sensor, Overcurrent Protection, Power System Protection, Fault Monitoring, Substation Indication, Electrical Safety.***

----------**********----------

I. INTRODUCTION

Transmission lines are used to transfer electrical power from generating stations to substations. During operation, faults such as line-to-ground faults, line-to-line faults, and overheating may occur. These faults are caused by insulation failure, environmental conditions, or equipment damage [3]. Faults can lead to power interruption and safety hazards. The Transmission Line Fault Detection project is designed to detect such faults quickly and automatically. The system continuously monitors three transmission lines. When a fault or abnormal temperature is detected, the fault detecting unit

senses the condition [1],[2]. A signal is then sent to the relay module. The relay operates using an AC/DC power supply. The faulty line is indicated at the substation using indicator bulbs OFF, Manual fault detection is slow and unsafe. Therefore, this system helps in fast, reliable, and safe fault identification in power systems.

II. LITERATURE REVIEW

Several researchers have worked on improving the speed and accuracy of transmission line fault detection systems to enhance power system reliability.

Gaurav Jichkar, Rahul Mohurle, and Vikas Kalambhe focused on techniques for rapid detection and precise location of faults in transmission lines. Their study emphasized minimizing response time to protect power system components from severe damage and maintaining system stability [1].

Yogita Raut, Aditi Shinde, and Purva Pokale proposed a system capable of quickly detecting and isolating faults in transmission lines. Their approach improved system reliability by reducing downtime and ensuring continuous power supply. The study highlighted the importance of automatic fault isolation in modern power networks [2].

Subhomoy Chakraborty and Anupam Debnath discussed advanced transmission line fault detection methods using IoT and smart sensing technologies. Their research demonstrated that integrating advanced sensors with communication systems enables faster and more accurate fault identification, supporting smart grid development [3].

Yuvaraj Ganesha and Mohamed Hisham analyzed the causes of transmission line faults, identifying weather conditions, equipment failure, and human error as major factors. Their work emphasized the need for efficient monitoring systems to prevent power loss and equipment damage [4].

From the above studies, it is clear that fast fault detection, accurate localization, and smart monitoring systems are essential for improving transmission line protection. The proposed project builds upon these concepts by implementing a reliable and cost-effective fault detection system for enhanced power system performance.

III. TYPES OF TRANSMISSION LINE FAULTS

Line-to-Ground (L-G)

Line-to-Line (L-L)

Over temprature

Fire Fault

IV. BLOCK DIAGRAM

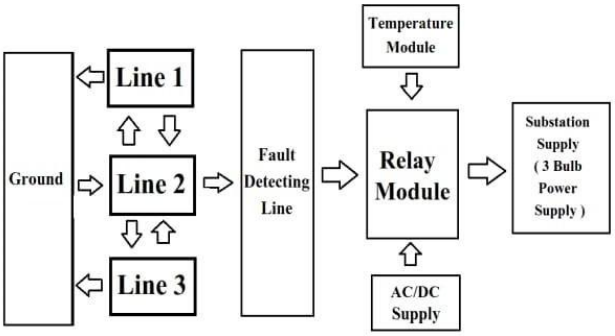

Fig. 1 Block Diagram

V. CIRCUIT DIAGRAM

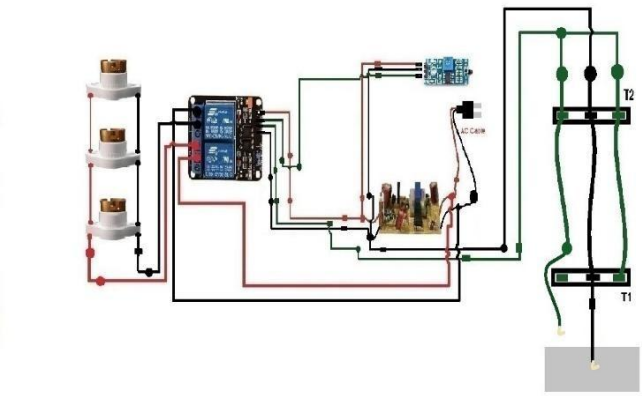

Fig. 2 Circuit Diagram

VI. WORKING PRINCIPLE

The transmission line fault detection system works by continuously monitoring three transmission lines (Line 1, Line 2, and Line 3) during normal operation. Under normal conditions, current flows properly through all lines, the temperature remains within safe limits, and all indicator bulbs at the substation glow, showing that the lines are healthy. The fault detecting unit checks for abnormal conditions such as overcurrent, short circuit, line-to-ground fault, or open circuit, while the temperature module monitors overheating of the conductors. If any fault or excessive temperature occurs, the respective sensing unit detects the abnormal condition and sends a signal to the relay module. The relay, which operates using an AC/DC power supply, immediately changes its contact position and isolates the faulty line from the system to prevent further damage. As a result, the indicator bulb connected to that particular transmission line turns OFF, clearly identifying the faulty line, while the other healthy lines continue operating normally. This system helps in quick fault identification, reduces equipment damage, and allows maintenance personnel to take corrective action efficiently.

VII. COMPONENTS USED

- DC Power Supply (Charger Kit) – 5 V / 12 V DC (for relay and sensor module)
- Double Channel Relay Module – 5 V DC, 10 A contacts (NO, NC, COM)
- Temperature Sensor Module (Thermistor based) – 5 V DC operating voltage
- Transmission Line Model (Tower) – Three-line conductor arrangement
- Indicator Lamps (Bulbs) – 230 V AC (Fault indication)
- Connecting Wires – Copper, insulated, Jumper Wire
- Lamps – 5 Watt, 230 V, AC For indication of fault.

VIII. HARDWARE IMPLEMENTATION

The hardware implementation of the Transmission Line Fault Detection System consists of sensing units, control unit, relay module, power supply unit, and indication section. The complete system is designed to detect electrical faults and overheating in three transmission lines and isolate the faulty line automatically.

i. Transmission Line Section

Three lines (Line 1, Line 2, Line 3) are created using insulated copper wires.

ii. Fault Detection Unit

The fault detection circuit includes:
Current sensing resistors or Current Transformer (CT)

iii. Temperature Monitoring Module

Temperature sensor (LM35 or similar) is attached near the transmission line.
It continuously measures conductor temperature.
If temperature exceeds preset limit:

iv. Relay Module

5V or 12V electromagnetic relay is used.
Relay driver circuit includes:
Transistor (BC547 or similar)
Base resistor Flyback diode (1N4007)
Working:
Fault signal energizes transistor.
Transistor drives relay coil.
Relay contact disconnects faulty line.
Corresponding indicator bulb turns OFF.

v. Power Supply Unit

The system requires DC supply for operation:
Step-down transformer (230V AC to 12V AC)

vi. Indication Section

Three bulbs (or LEDs) are connected to each transmission line.
Under normal condition:All bulbs glow.
When fault occurs: Faulty line relay disconnects supply. Corresponding bulb turns OFF.
This provides visual fault indication.

IX. FLOWCHART

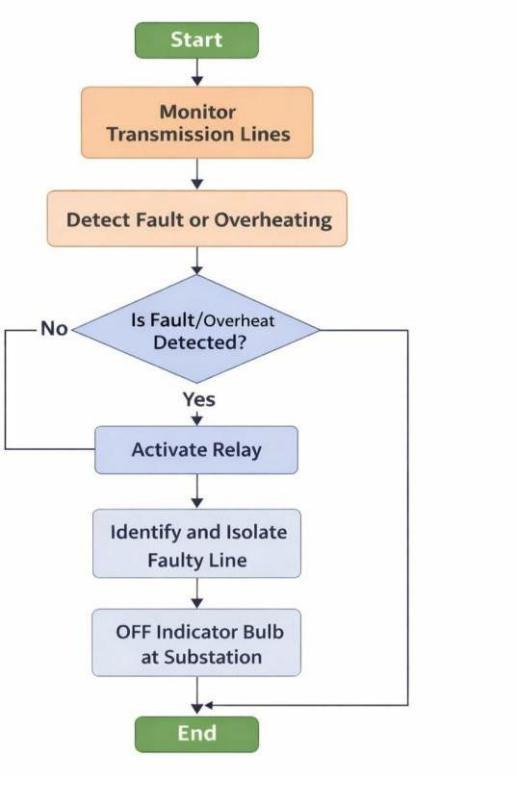

Fig. 2 Flow Chart

X. RESULT AND DISCUSSION

RESULT

The Transmission Line Fault Detection System was successfully designed and implemented to monitor three transmission lines continuously. During normal operating conditions, all three indicator bulbs remained ON, confirming that the lines were healthy and functioning properly. When a fault such as line-to-ground fault, short circuit, or overheating was introduced in any one of the transmission lines, the fault detecting unit and temperature module accurately sensed the abnormal condition. The signal was transmitted to the relay module, which immediately isolated the faulty line. As a result, the corresponding indicator bulb turned OFF, while the remaining healthy lines continued to operate normally.

The system responded quickly to faults and effectively prevented further damage by disconnecting the affected line. The temperature monitoring section also successfully detected overheating conditions and triggered protective action.

DISCUSSION

The implemented system demonstrates a simple, reliable, and cost-effective method for detecting and isolating faults in transmission lines. The use of sensors and relay modules ensures fast response and automatic operation without manual intervention. The visual indication using bulbs makes it easy to identify the faulty line quickly at the substation [3].

One of the main advantages of this system is its simplicity and suitability for educational and small-scale applications. However, in real-world large transmission systems, advanced protection methods such as microcontroller-based relays, distance protection, and SCADA systems are used for more accurate fault location and monitoring [2].

XI. ADVANTAGES

BENEFITS OF PROPOSED SYSTEM:

- Fast and automatic detection of transmission line faults.
- Provides clear fault indication at the substation.
- Reduces power outage time and improves system reliability.
- Enhances safety by minimizing manual inspection.
- Lowers maintenance cost and effort.

IMPROVEMENTS OVER EXISTING SYSTEM:

- Faster and more accurate than manual fault detection.
- More reliable than fuse-based or electromechanical relay systems.
- Provides real-time monitoring and immediate alert.
- Reduces human intervention and improves overall safety.

XII. LIMITATIONS

- Works only for the monitored lines.
- 2. Requires continuous power supply.
- 3. Setup cost is higher than conventional methods.

TECHNICAL / PRACTICAL LIMITATIONS:

- Accuracy depends on sensor placement.
- May not detect very minor faults.
- Relay and sensor response can limit real-time detection.
- Extreme weather may affect sensor performance.

XIII. FUTURE SCOPE

The developed Transmission Line Fault Detection System successfully detects faults and overheating conditions in a small-scale model. However, the system can be further improved and expanded for better performance, reliability, and practical implementation in real power systems. The following future improvements are possible:

1. Automatic Fault Isolation Mechanism

In the current system, relays are used to disconnect the faulty line. In future, advanced protective devices such as automatic circuit breakers and intelligent protection relays can be used. These devices can isolate only the affected section of the transmission line without disturbing the entire system. This will reduce power interruption time and improve system stability.

2. Use of More Accurate and Sensitive Sensors

The system can be upgraded by using high-precision current transformers, voltage sensors, and digital temperature sensors. These advanced sensors can detect minor variations in current or temperature at an early stage. Early fault detection helps in preventing major damage, reducing maintenance costs, and increasing the lifespan of equipment.

3. Expansion for Long-Distance Transmission Lines

The project can be extended to monitor multiple transmission lines over longer distances. A centralized control unit using microcontrollers or PLC systems can be implemented to handle large-scale transmission networks. This will make the system suitable for real substation and industrial applications.

4. Data Logging and Alert System

Future improvement can include adding a data logging system to record fault occurrences, temperature variations, and current levels. This stored data can be used for analysis and preventive maintenance. An automatic alert system such as buzzer alarms or GSM-based SMS alerts can also be added to immediately inform maintenance staff about faults.

5. Integration with Smart Grid Technology

The system can be integrated with modern smart grid protection systems. Smart grids use automated control and digital monitoring to improve power distribution efficiency. By integrating with such systems, better load management, faster fault response, and improved reliability can be achieved.

XIV. CONCLUSION

The Transmission Line Fault Detection System was successfully designed and implemented to monitor transmission lines for electrical faults and overheating conditions. The system continuously observes the condition of the transmission lines and detects abnormal situations such as overcurrent, short circuits, line-to-ground faults, and excessive temperature rise [3]. By using temperature sensors and a relay module, the system ensures fast and automatic detection of faults without requiring manual supervision.

When an abnormal condition occurs, the sensing unit quickly identifies the fault and sends a signal to

the relay module. The relay immediately isolates the faulty transmission line, preventing further damage to equipment and avoiding the spread of the fault to other healthy lines. The visual indication system at the substation clearly shows the faulty line by turning OFF the corresponding indicator bulb, making identification simple and quick for maintenance personnel.

The project successfully achieves its main objectives, including rapid fault detection, automatic isolation, reduced power outage time, improved operational safety, and enhanced reliability of the power transmission system. The system is simple, cost-effective, and suitable for educational purposes as well as small-scale power monitoring applications.

Overall, this project demonstrates an effective method of protecting transmission lines and ensuring continuous and safe power delivery.

ACKNOWLEDGMENT

The authors would like to express their sincere gratitude to Prof. S. J. Wagchaure for his valuable guidance, continuous support, and encouragement throughout the development of this project. His technical insights and suggestions greatly helped in the successful completion of this work.

The authors also thank the Department of Electrical Engineering, Sanjivani K.B.P. Polytechnic, for providing the necessary facilities and resources to carry out this project. Finally, we acknowledge all those who directly or indirectly contributed to the completion of this work.

REFERENCES

[1] Gaurav Jichkar, Rahul Mohurle, Vikas Kalambhe "Electrical Fault Detection in Overhead Transmission Line",International Journal of Advanced Research in Computer and Communication Engineering,Nagpur. Impact Factor 8.102 ISSN (O) 2278-1021, ISSN (P) 2319-5940 Vol. 13, March 2024

[2] Yogita Raut, Aditi Shinde, Purva Pokale "Smart Monitoring & Fault Detection System for Power Transmission Lines" International Research Journal of Engineering and Technology (IRJET),Pune. ISSN No.- 2395-0056, Apr 2025.

[3] Subhomoy Chakraborty, Anupam Debnath "Transmission Line Faults Detection System With Temparature Protection",Journal Of Emerging Technologies And Innovative Research (JETIR),ISSN No.-2349-5162,April 2023, Volume 10, Issue 4

[4] Yuvaraj Ganesha, Mohamed Hisham "3-Phase transmission line monitoring and fault detection system",International Journal of Automobile Engineering,P-ISSN: 2707-8205 April 2023.